Multi-function steering wheel

From November 2004

Notes:

Information for

- Relay and fuse arrangements
- Connector arrangements
- Control Modules and Relays
- Ground connections

⇒ Component Locations!

Information for

- Troubleshooting Procedures

⇒ Guided Fault Finding using VAS 5051/5052

Protected by copyright. Copying for private or commercial purposes, in part or in whole, is not permitted unless authorised by AUDI AG. AUDI AG does not guarantee or accept any liability with respect to the correctness of information in this document. Copyright by AUDI AG.

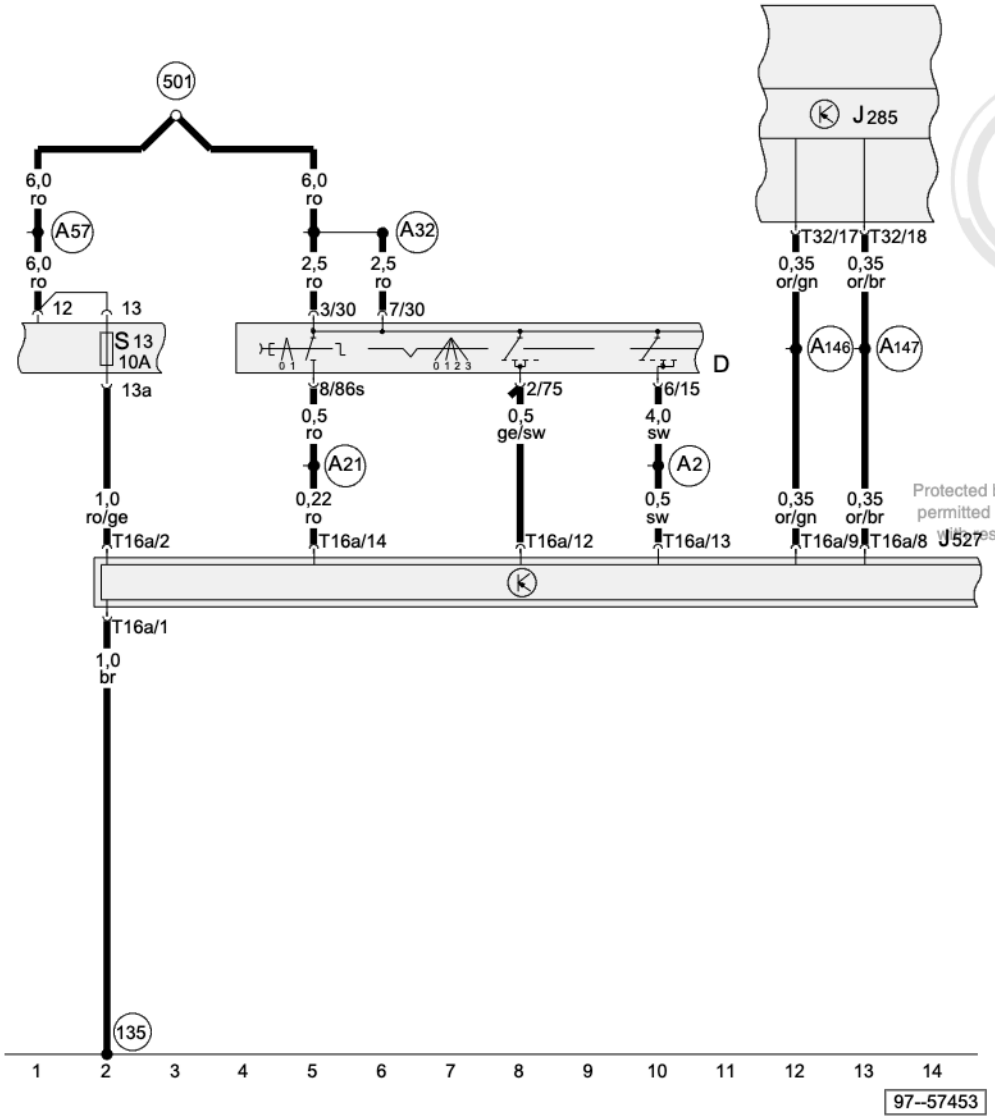

Steering Column Electronic Systems Control Module, Fuse, Instrument Cluster Control Module, Ignition/Starter Switch

D	Ignition/Starter Switch
J285	Instrument Cluster Control Moduel
J527	Steering Column Electronic Systems Control Module
S13	Fuse (on fuse/relay panel)
T16a	16-Pin Connector, black, on steering Column Electronic Systems Control Module
T32	32-Pin Connector, blue, on instrument panel insert
135	Ground connection -2-, in instrument panel wiring harness
501	Threaded connection -2- (30), on the relay plate
A2	Plus connection (15), in instrument panel wiring harness
A21	Wire connection (86s), in instrument panel wiring harness
A32	Plus connection (30), in instrument panel wiring harness
A57	Plus connection -3- (30), in instrument panel wiring harness
A146	Comfort System High-bus Connection (in instrument panel wiring harness)
A147	Comfort System Low-bus Connection (in instrument panel wiring harness)

Protected by copyright. Copying for private or commercial purposes, in part or in whole, is not permitted unless authorised by AUDI AG. AUDI AG does not guarantee or accept any liability with respect to the correctness of information in this document. Copyright by AUDI AG.

ws	=	white
sw	=	black
ro	=	red
br	=	brown
gn	=	green
bl	=	blue
gr	=	grey
li	=	lilac
ge	=	yellow
or	=	orange
rs	=	pink

Steering Column Electronic Systems Control Module, Control Module In Steering Wheel

E221 Control Module in Steering Wheel
F350 Spiral Spring
J527 Steering Column Electronic Systems Control Module

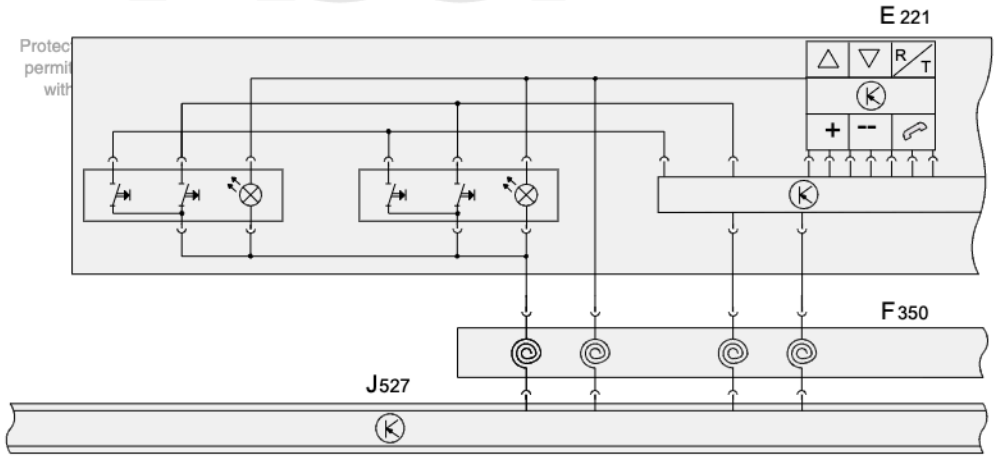

ws	=	white
sw	=	black
ro	=	red
br	=	brown
gn	=	green
bl	=	blue
gr	=	grey
li	=	lilac
ge	=	yellow
or	=	orange
rs	=	pink

15 16 17 18 19 20 21 22 23 24 25 26 27 28

97--59684

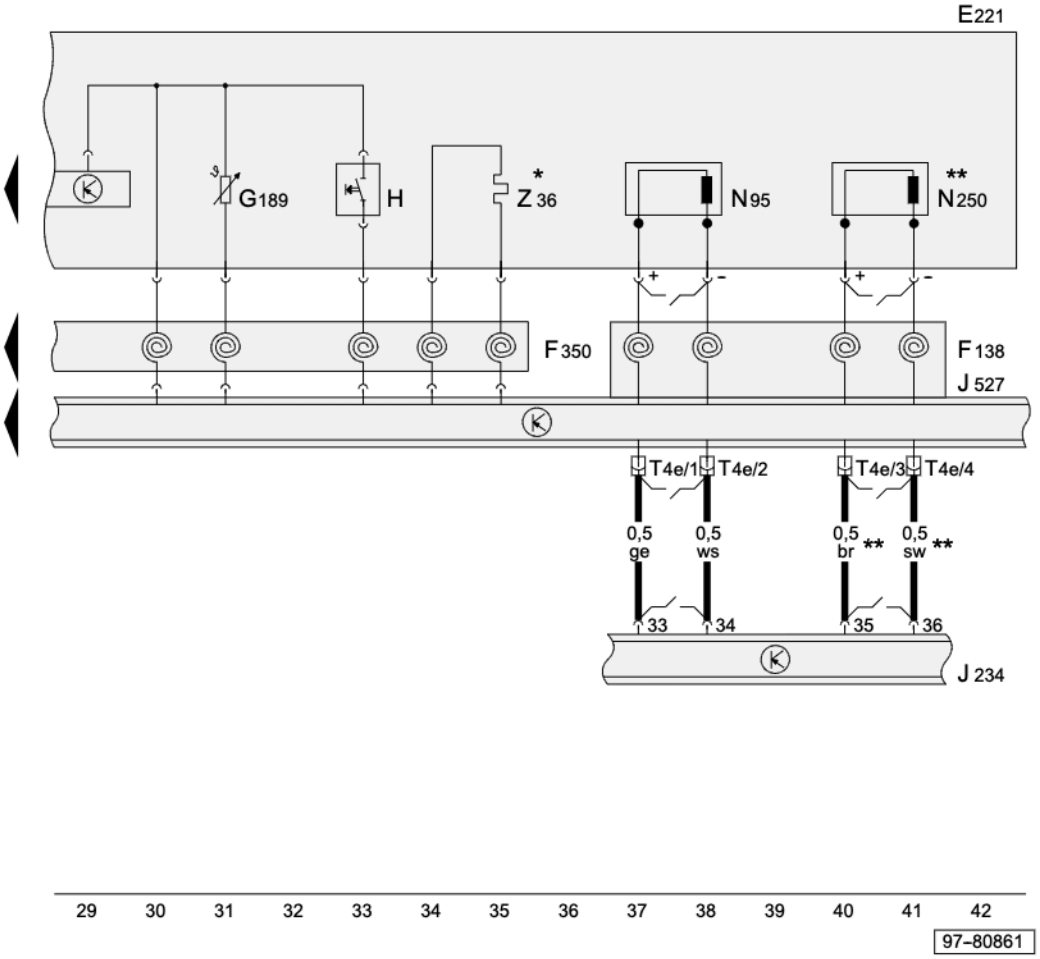

Steering Column Electronic Systems Control Module, Control Module In Steering Wheel

E221	Control Module In Steering Wheel
F138	Airbag Spiral Spring/Return Spring With Slip Ring
F350	Spiral Spring
G189	Overheat Sensor
H	Signal Horn Activation
J234	Airbag Control Module
J527	Steering Column Electronic Systems Control Module
N95	Driver's Airbag Igniter
N250	Driver's Airbag Igniter 2
T4e	4-Pin Connector, yellow, connector station: module carrier in interior
Z36	Heated Steering Wheel
<fo:external-graphic src="/../PDOC/samba/tools/png-convert/out//slp/ft_icons/kurzbr_l.png" content-width="20pt" scaling="uniform"/>	Short circuit bridge becomes effective when connector is unplugged
Q	Where applicable. Operation via convenience CAN bus by heated driver's seat adjuster in A/C Control Head

ws	=	white
sw	=	black
ro	=	red
br	=	brown
gn	=	green
bl	=	blue
gr	=	grey
li	=	lilac
ge	=	yellow
or	=	orange
rs	=	pink

Protected by copyright. Copying for private or commercial purposes, in part or in whole, is not permitted unless authorised by AUDI AG. AUDI AG does not guarantee or accept any liability with respect to the correctness of information in this document. Copyright by AUDI AG.